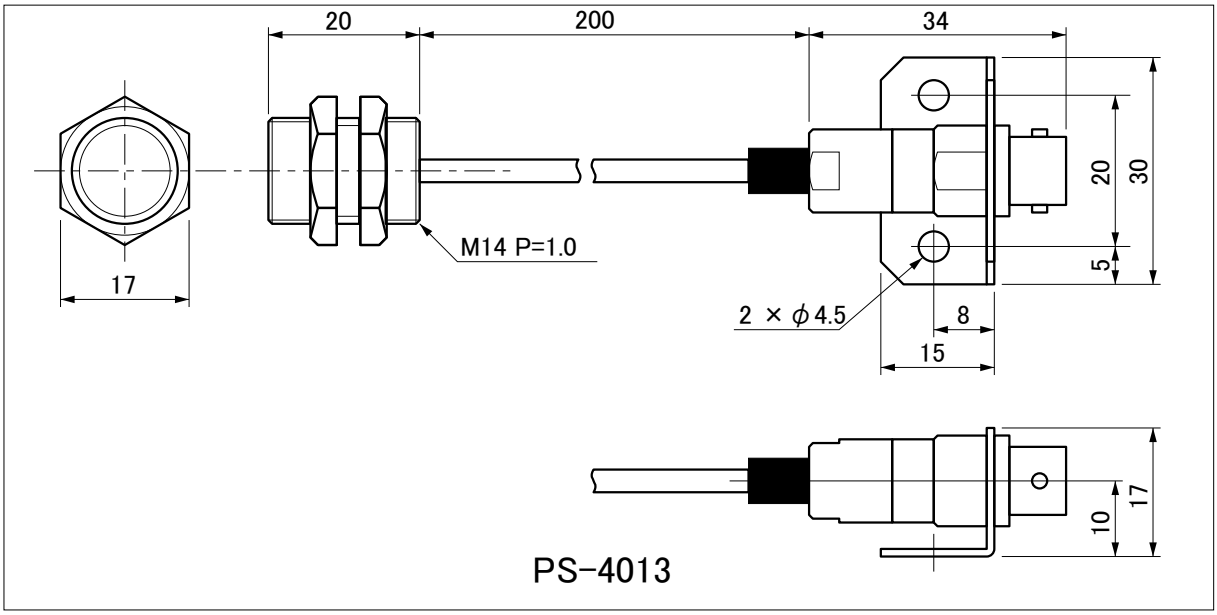

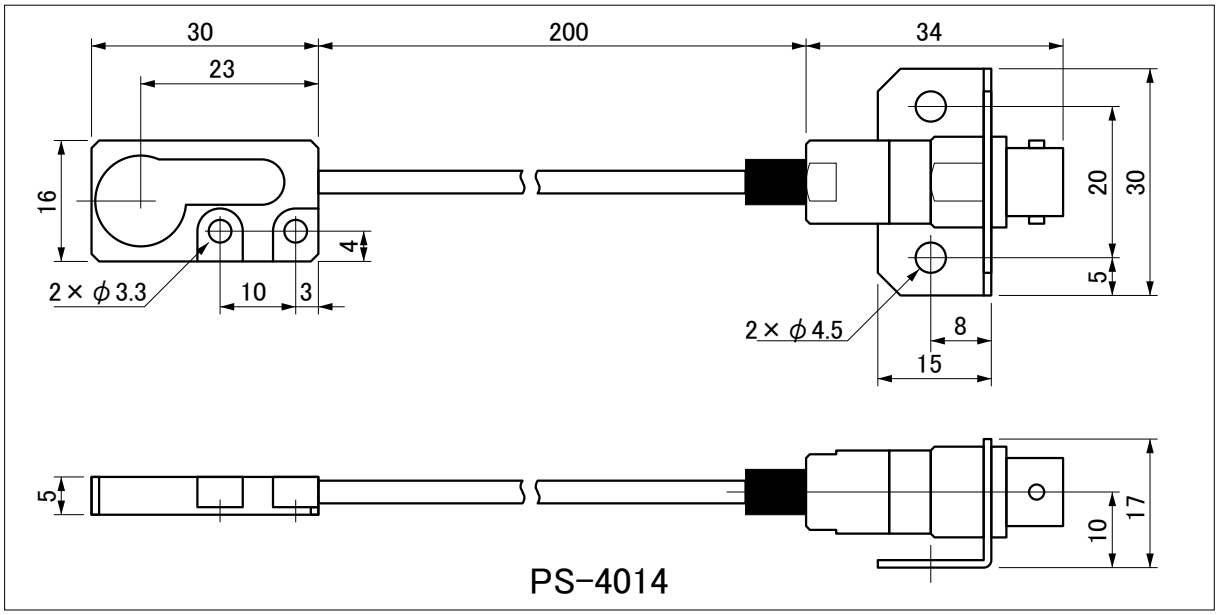

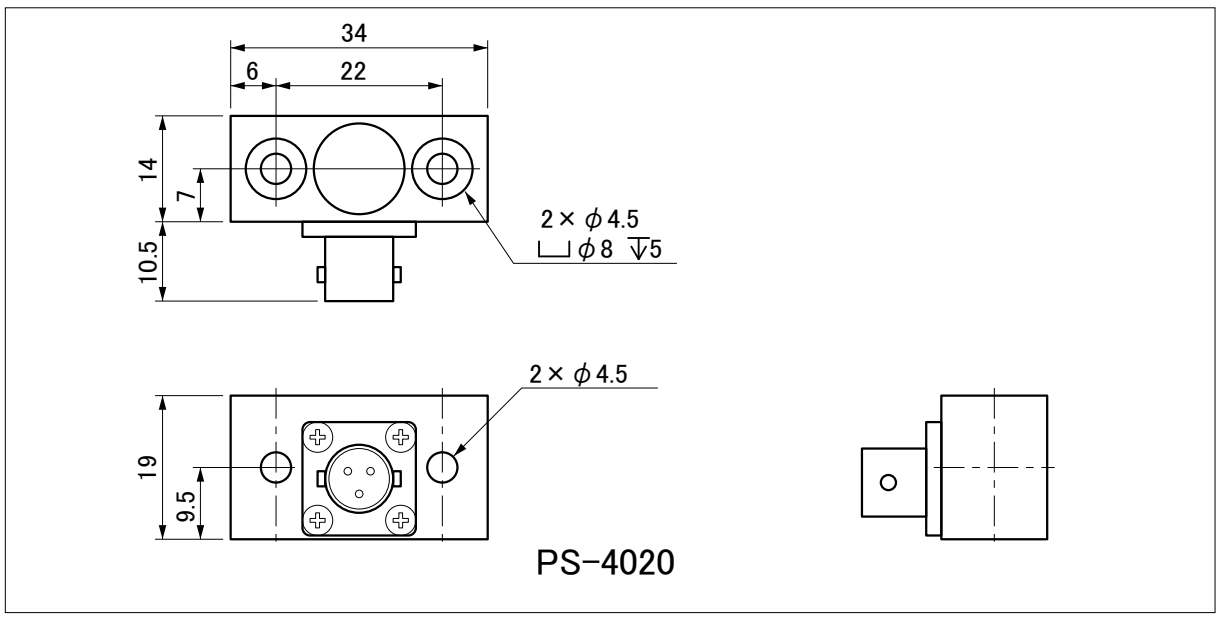

FILE NAME:sensor DATE:2014/1/22
SUGIYAMA ELECTRIC SYSTEM INC.

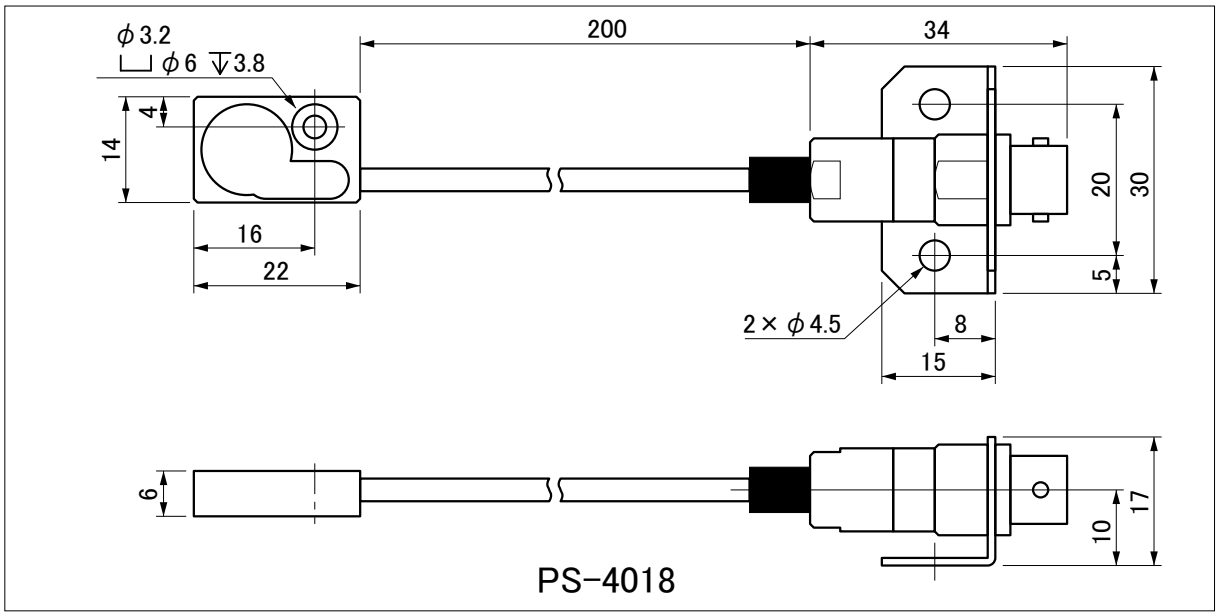

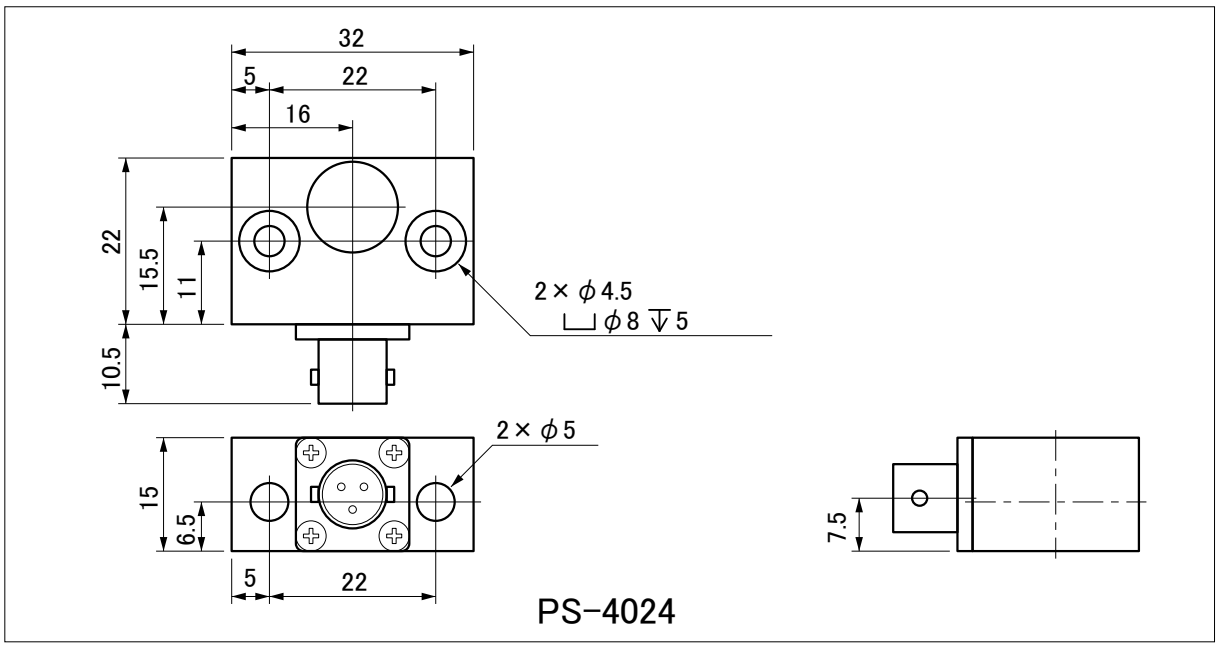

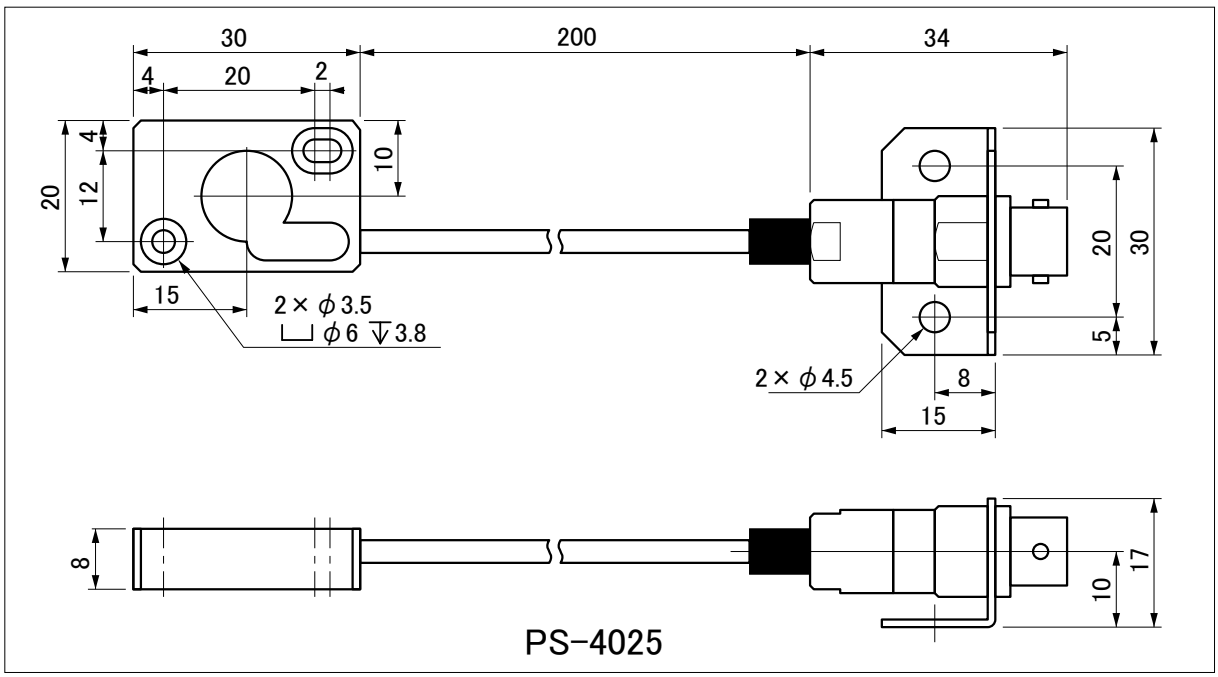

FILE NAME:sensor DATE:2014/1/22
SUGIYAMA ELECTRIC SYSTEM INC.

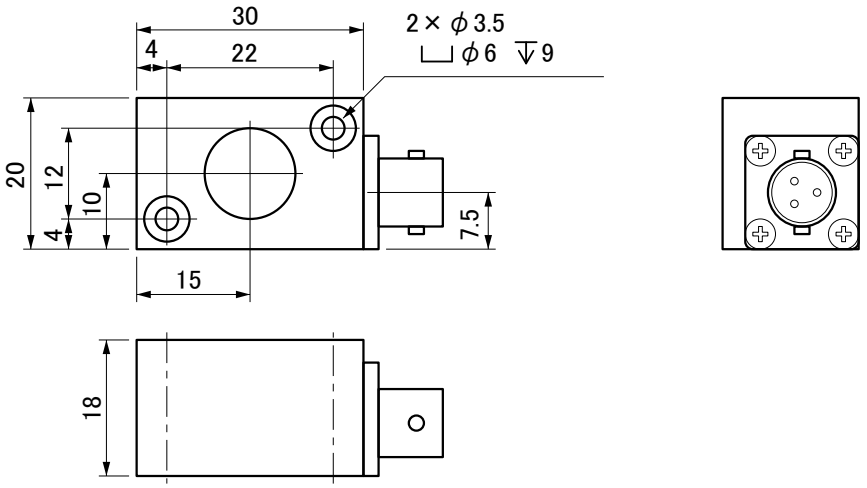

PS-4026

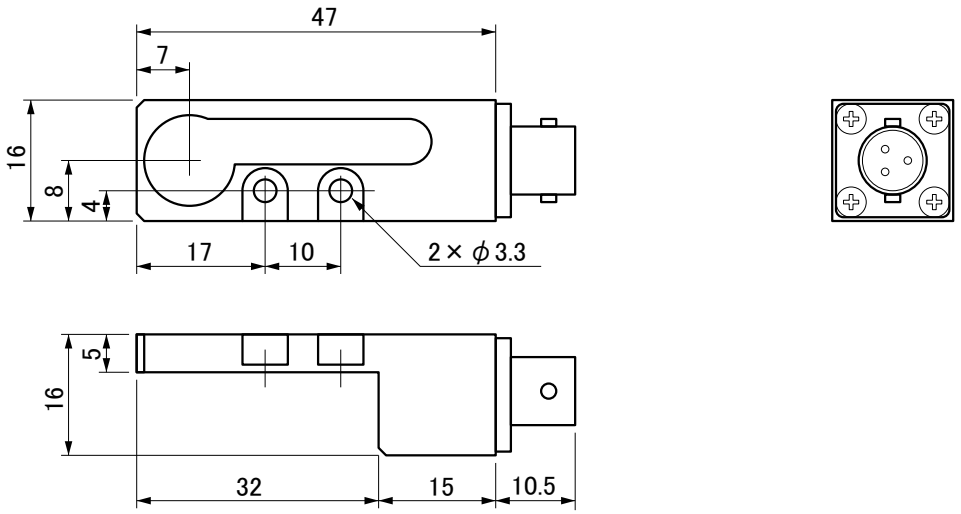

PS-4027

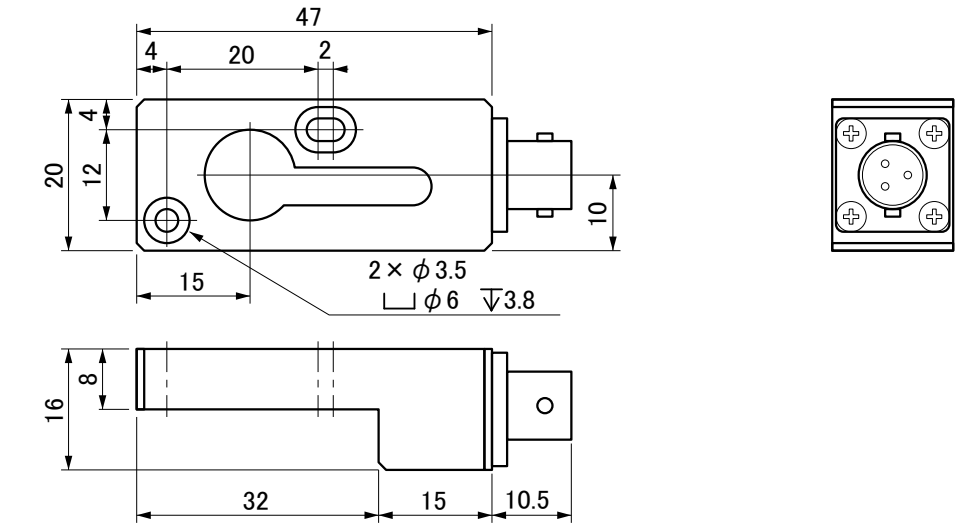

PS-4028

FILE NAME:sensor DATE:2014/1/22
SUGIYAMA ELECTRIC SYSTEM INC.

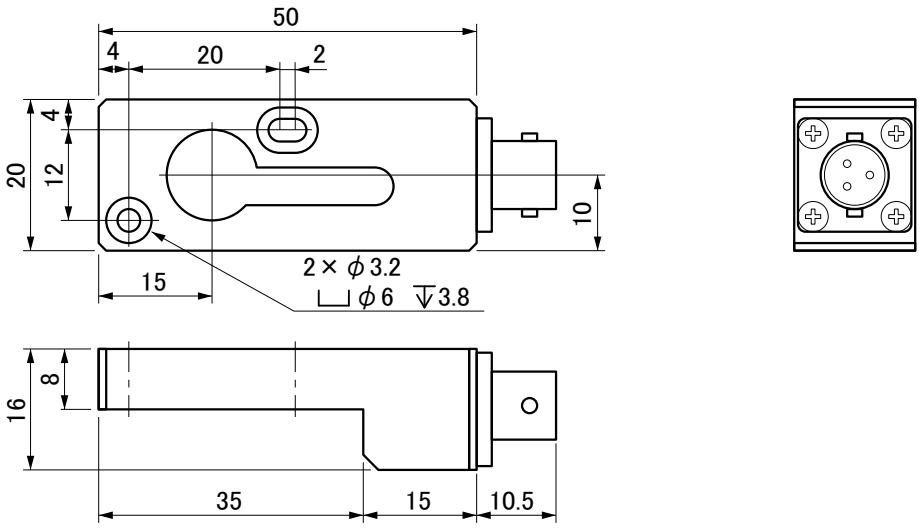

PS-4029

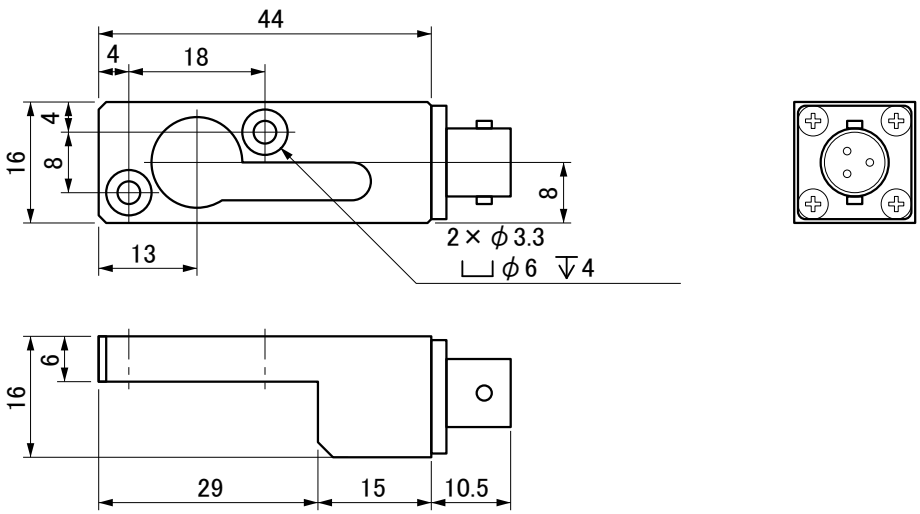

PS-4031

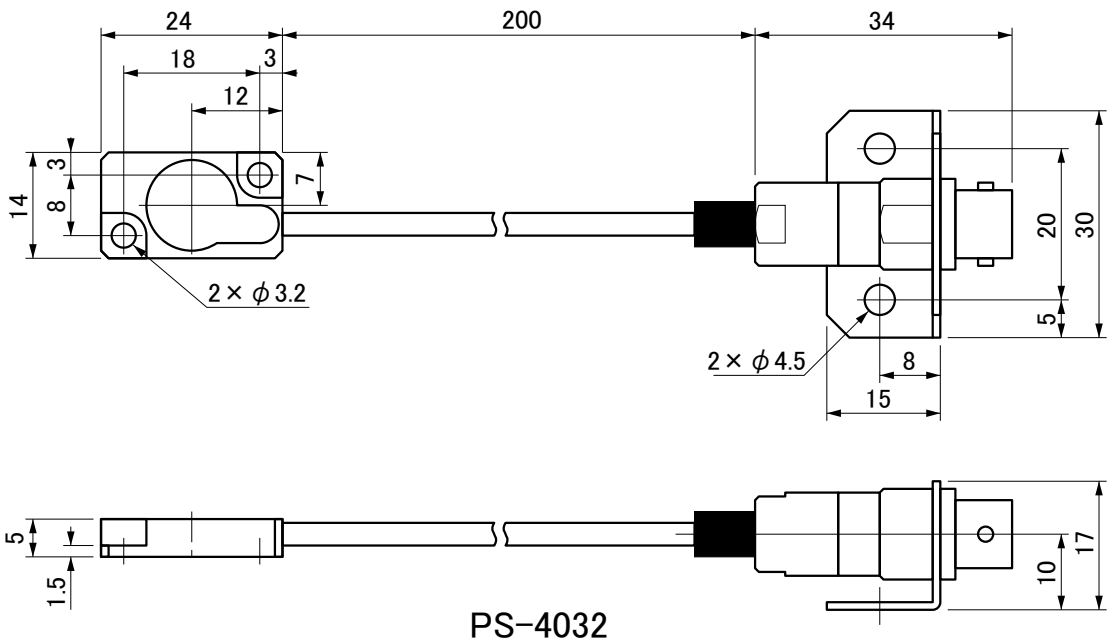

PS-4032

FILE NAME:sensor DATE:2014/1/22
SUGIYAMA ELECTRIC SYSTEM INC.

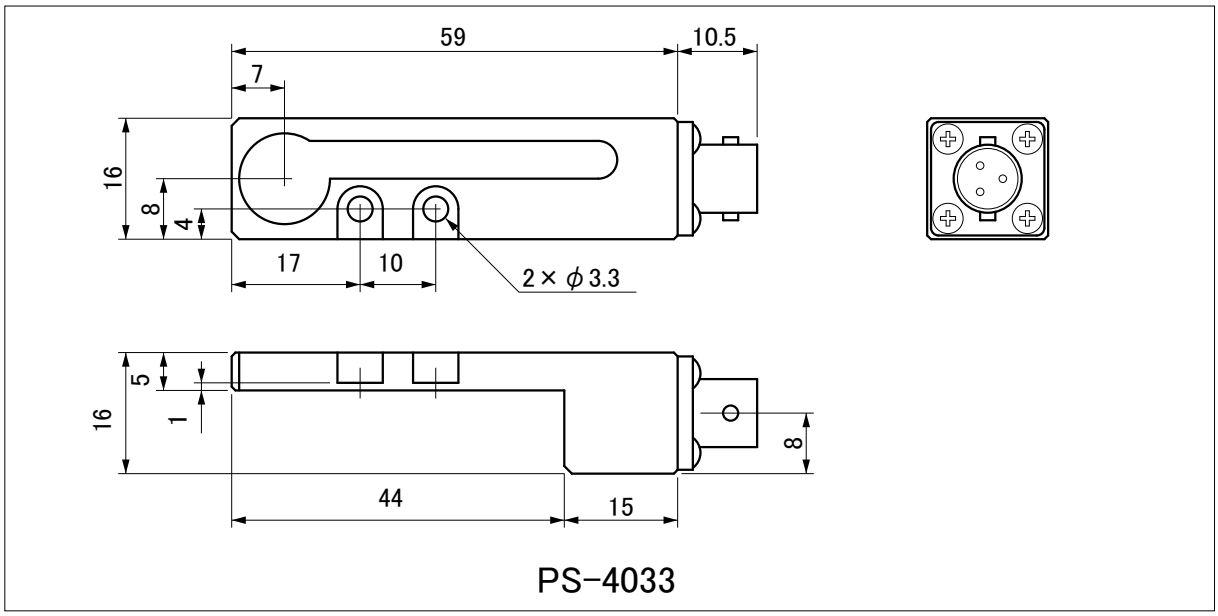
59
10.5
7
16
8
4
17
10
2×φ3.3
5
1
16
8
44
15
PS-4033

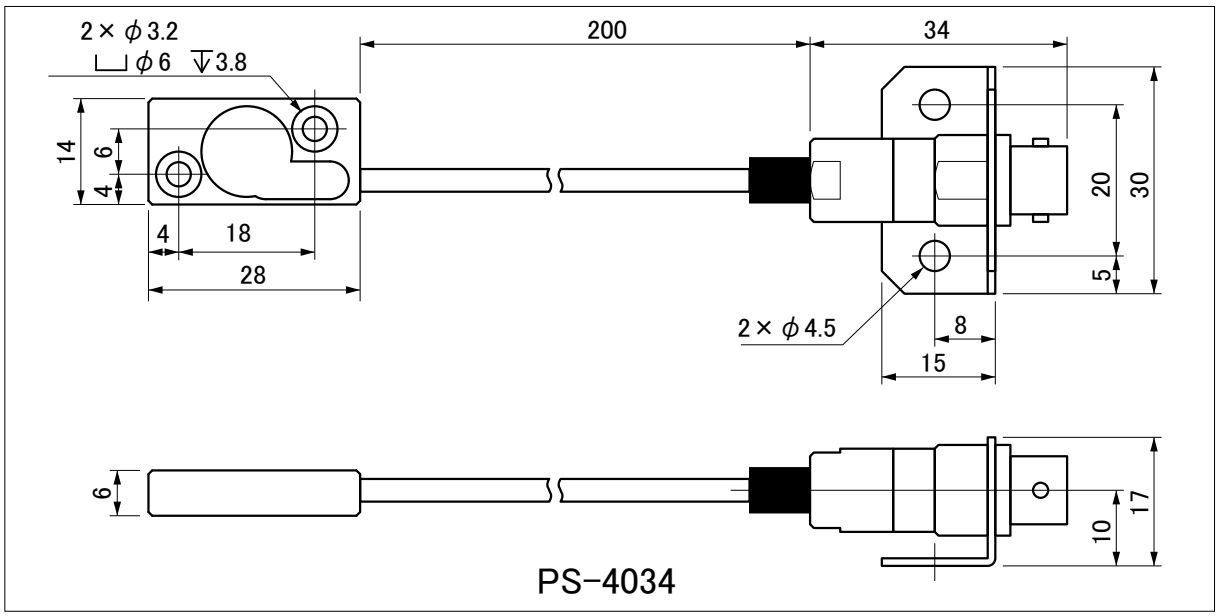
2×φ3.2
⌴φ6 ↧3.8
200
34
14
6
4
4
18
28
20
30
5
2×φ4.5
8
15
6
10
17
PS-4034