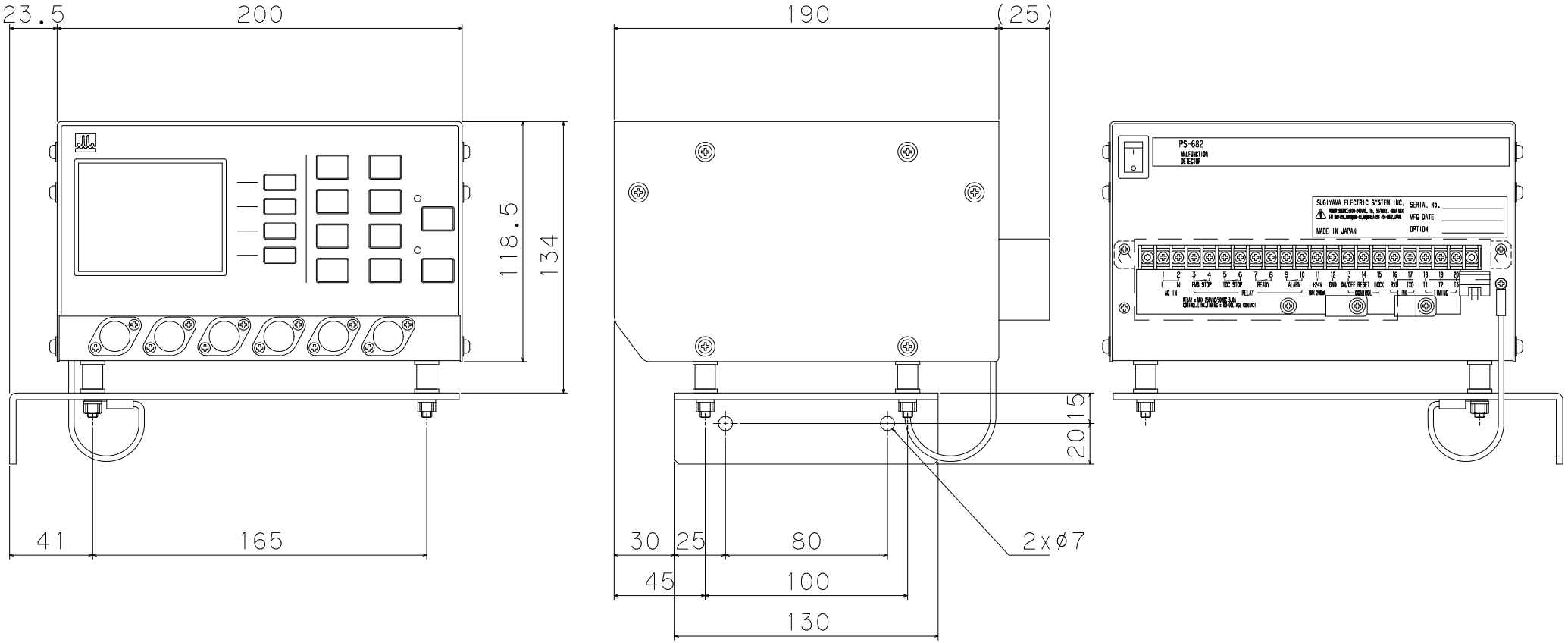

Dimensions are in millimeters.

	DATE		TITLE
	2025.02.26		PS-682
SUGIYAMA ELECTRIC SYSTEM INC.	A3	1:2	FILE PS682DIM.DXF