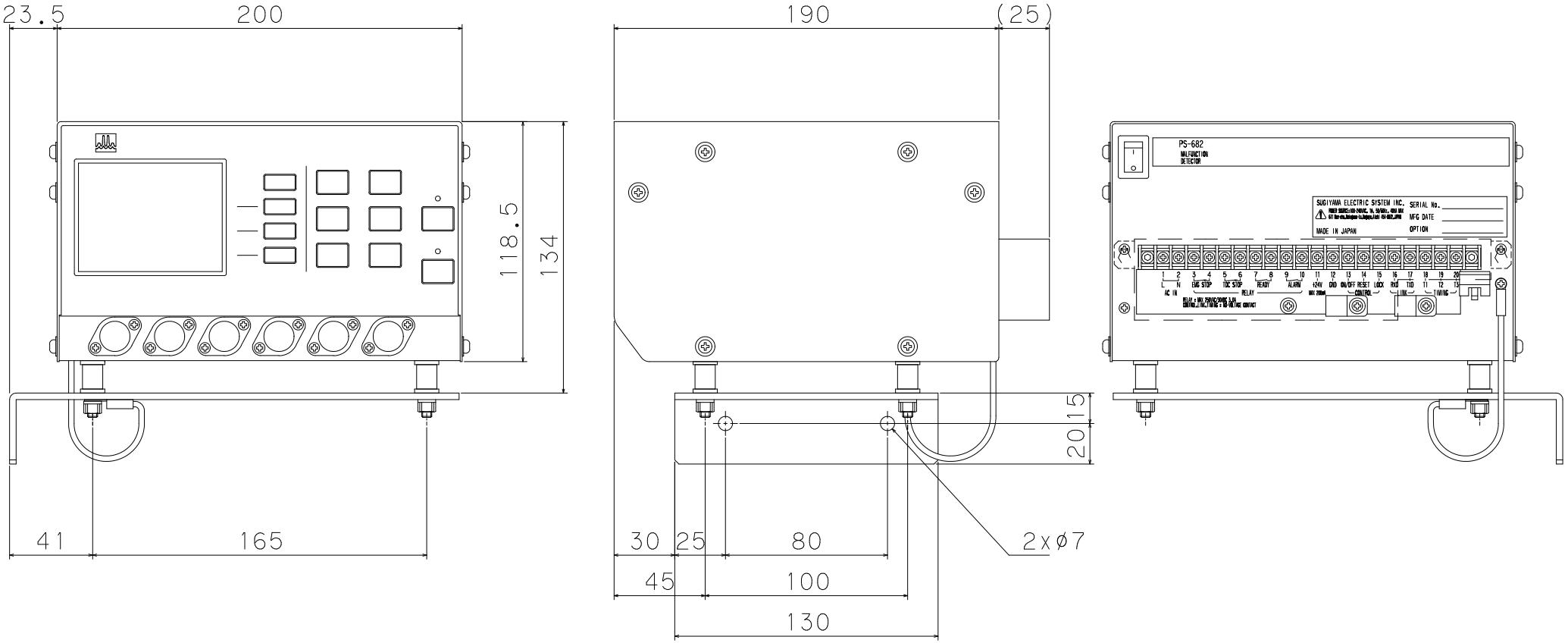

Dimensions are in millimeters.

	DATE	TITLE
	2025.02.26	PS-682
SUGIYAMA ELECTRIC SYSTEM INC. A3 1:2		FILE PS682DIM_TOUCH.DXF